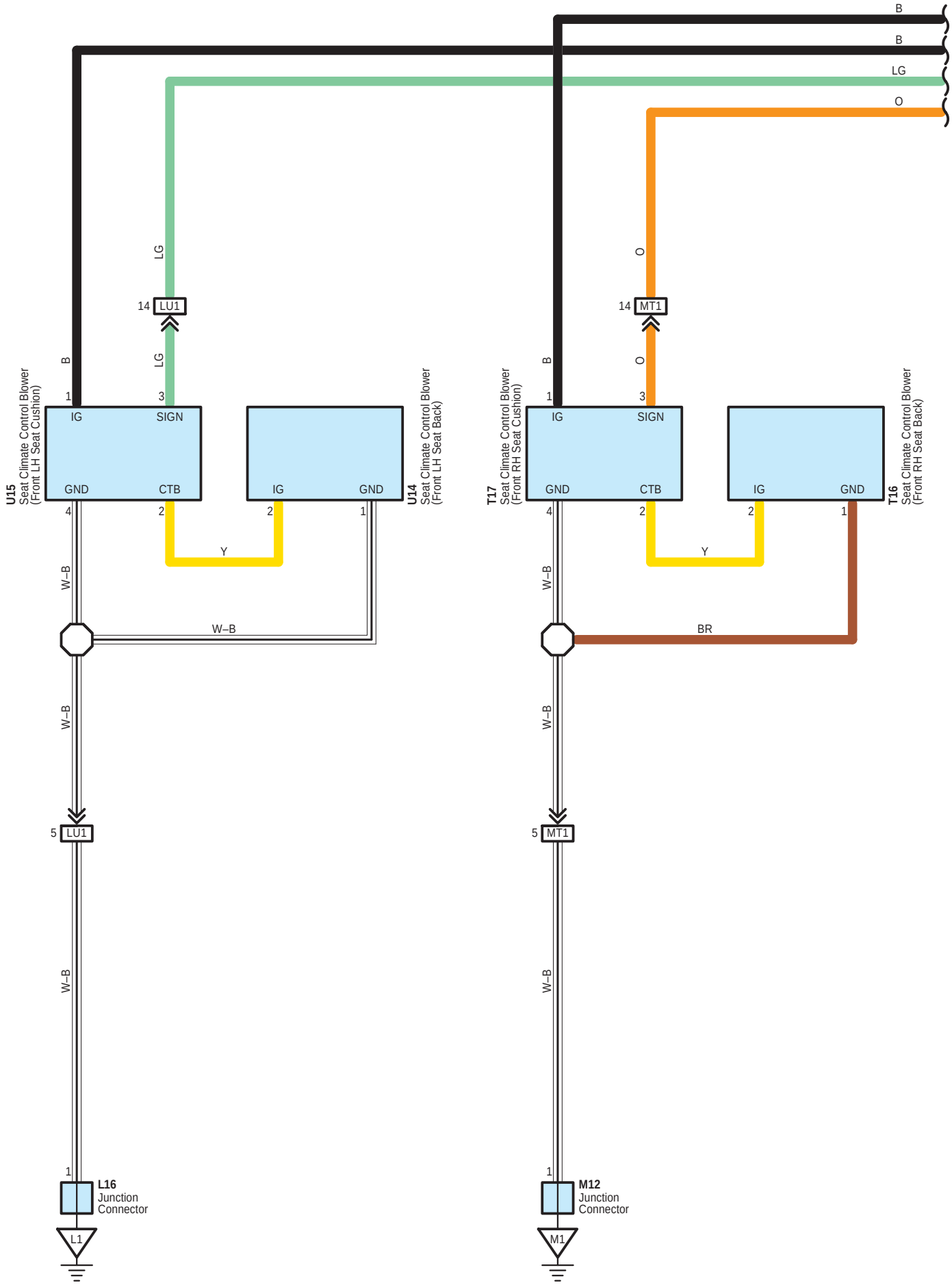
B
B
LG
O
LG
14 LU1
B
LG
1
3
IG
SIGN
GND
CTB
U15
Seat Climate Control Blower
(Front LH Seat Cushion)
IG
GND
U14
Seat Climate Control Blower
(Front LH Seat Back)
4
2
2
1
Y
W–B
W–B
W–B
5 LU1
W–B
1
L16
Junction
Connector
L1
O
14 MT1
B
O
1
3
IG
SIGN
GND
CTB
T17
Seat Climate Control Blower
(Front RH Seat Cushion)
IG
GND
T16
Seat Climate Control Blower
(Front RH Seat Back)
4
2
2
1
Y
W–B
BR
W–B
5 MT1
W–B
1
M12
Junction
Connector
M1

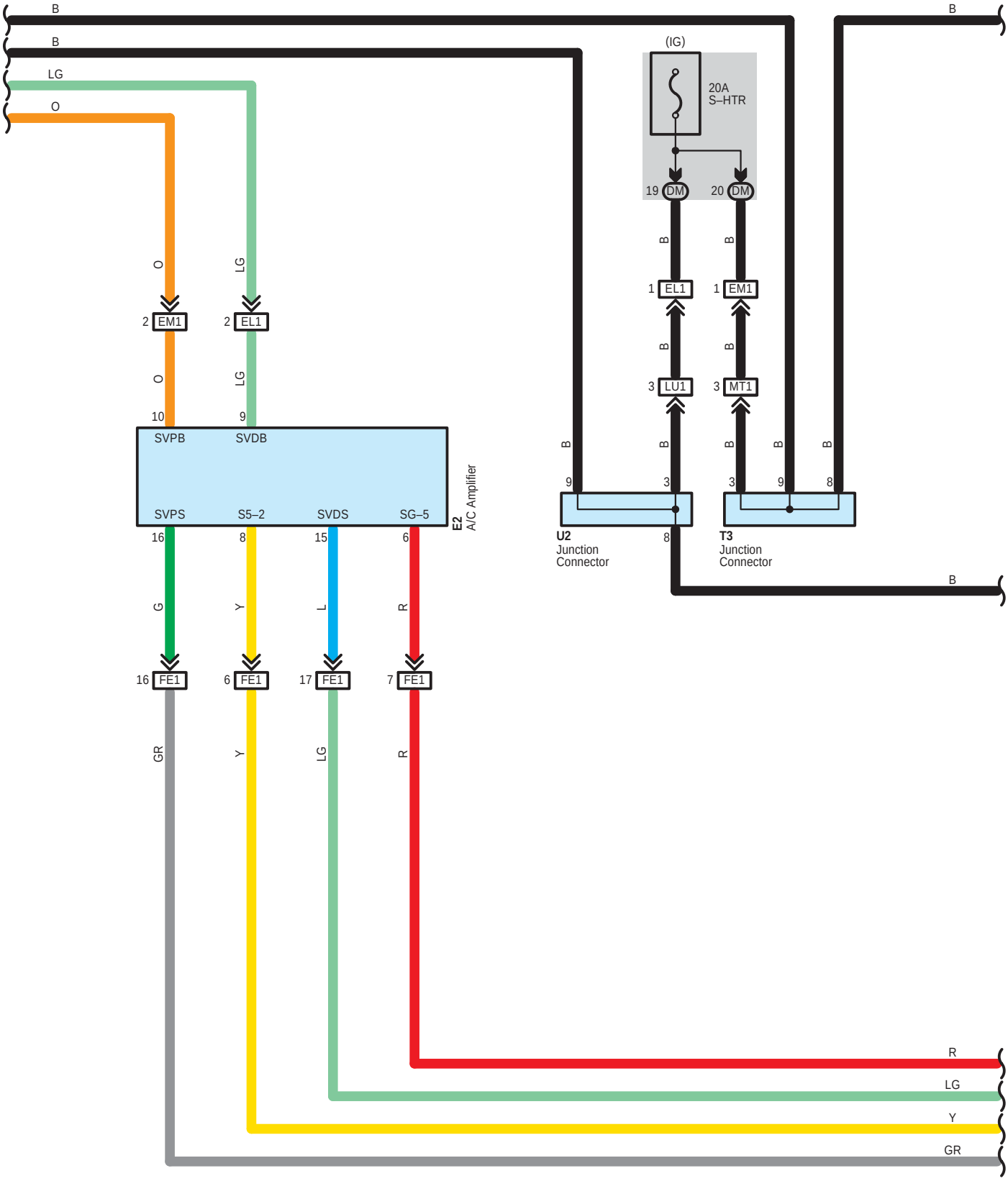
B
B
LG
O
B
(IG)
20A
S–HTR
19 DM
20 DM
B
B
1 EL1
1 EM1
B
B
3 LU1
3 MT1
O
LG
2 EM1
2 EL1
O
LG
10
9
SVPB
SVDB
SVPS
S5–2
SVDS
SG–5
E2
A/C Amplifier
16
8
15
6
G
Y
L
R
16 FE1
6 FE1
17 FE1
7 FE1
GR
Y
LG
R
B
B
B
B
B
9
3
3
9
8
8
U2
Junction
Connector
T3
Junction
Connector
B
R
LG
Y
GR

Climate Control Seat and Seat Heater

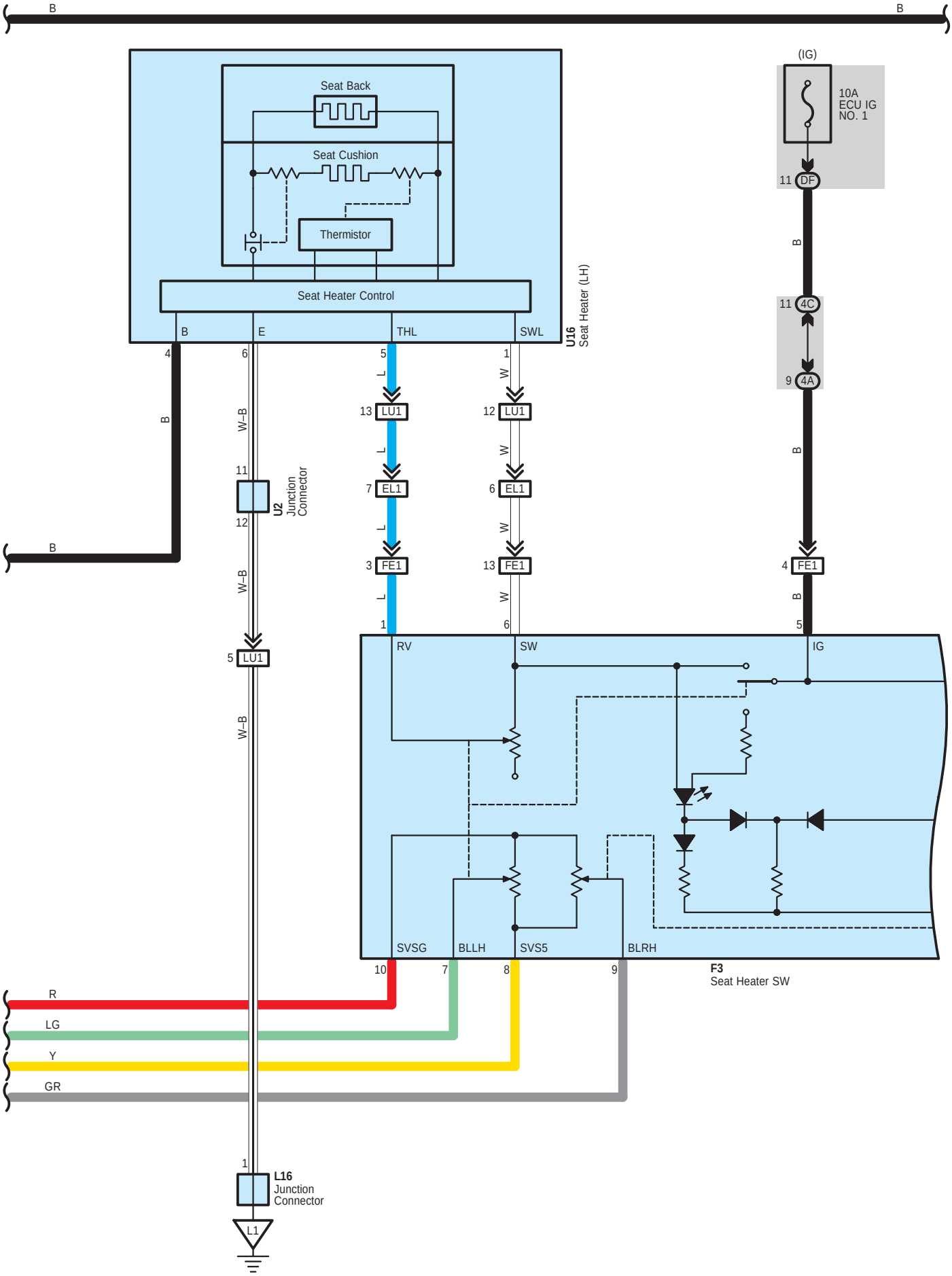

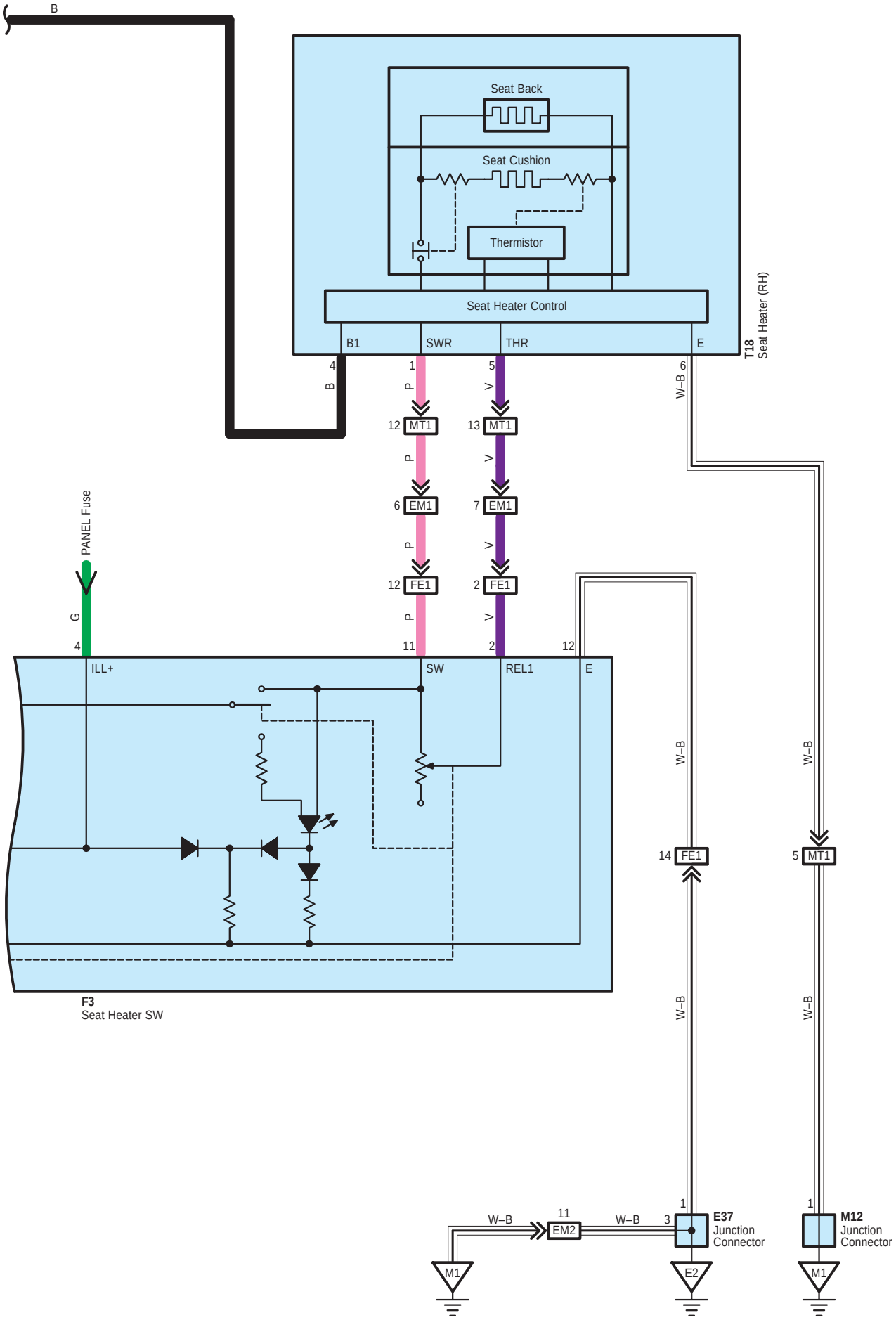
B
Seat Back
Seat Cushion
Thermistor
Seat Heater Control
B1
SWR
THR
E
T18
Seat Heater (RH)
4
B
1
P
5
V
6
W–B
12 MT1
13 MT1
6 EM1
7 EM1
12 FE1
2 FE1
PANEL Fuse
G
4
11
2
12
ILL+
SW
REL1
E
W–B
14 FE1
5 MT1
F3
Seat Heater SW
1
3
E37
Junction
Connector
11
EM2
M12
Junction
Connector
M1
E2
M1

○ : **Parts Location**

Code	See Page	Code	See Page	Code	See Page
E2	58	T3	66	U14	66
E37	58	T16	66	U15	66
F3	61	T17	66	U16	66
L16	62	T18	66		
M12	62	U2	66		

: **Junction Block and Wire Harness Connector**

Code	See Page	Junction Block and Wire Harness (Connector Location)
4A	42	Instrument Panel Wire and J/B No.4 (Instrument Panel Right)
4C		
DF	30	Instrument Panel Wire and Instrument Panel J/B (Lower Finish Panel)
DM		

: **Connector Joining Wire Harness and Wire Harness**

Code	See Page	Joining Wire Harness and Wire Harness (Connector Location)
EL1	69	Instrument Panel Wire and Floor Wire (Left Kick Panel)
EM1	69	Instrument Panel Wire and Floor No.2 Wire (Right Kick Panel)
EM2		
FE1	69	Instrument Panel No.2 Wire and Instrument Panel Wire (Under the Console Box)
LU1	71	Floor Wire and Front Seat LH Wire (Under the Front LH Seat)
MT1	71	Floor No.2 Wire and Front Seat RH Wire (Under the Front RH Seat)

▽ : **Ground Points**

Code	See Page	Ground Points Location
E2	69	Instrument Panel Brace LH
L1	70	Rear Pillar LH
M1	70	Roof Side Rear Inner Panel RH